www.wettringer-modellbauforum.de Bauplanarchiv

H-0376-0389 PRINTED IN GERMANY FOR REVELL GmbH & Co. KG

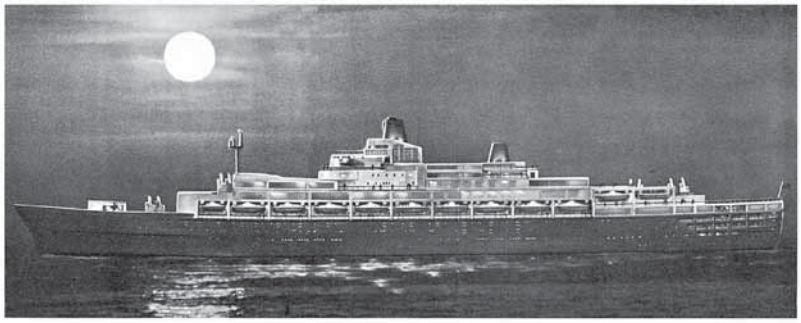

Assembly Instructions for your

Revell
Easy-to-assemble Authentic Kit

THE SCALE OF THIS MODEL IS
1/495 ACTUAL SIZE OR 1" = 41' 2.5"

COPYRIGHT 1961 BY REVEL, INC., VENICE, CALIF. H-376 LITHO IN U.S.A.

Exciting NEW Orient Liner Oriana

INTERESTING FACTS ABOUT BRITAIN'S NEWEST LUXURY LINER

At 40,000 tons the new ORIANA is by far the largest ship ever to be built for the Orient Line and, as with all well designed ships, her speed and size are closely linked.

The Orient Line had been thinking about ORIANA even before ORSOVA, her immediate predecessor, had sailed on her maiden voyage in 1954. It was thought that the new ship would have a service speed faster than ORSOVA's 22½ knots, and it was soon apparent that 27½ knots was the next speed which could maintain a suitable time-table.

Vickers-Armstrongs, who were to build the ship, advised that the smallest ship to achieve this speed economically must have a length of about 800 feet and a shaft horsepower of 80,000.

In designing and building a ship as exciting as ORIANA an enormous amount of research and experiment is necessary. For example: no less than sixteen different types of hull models were run by Vickers-Armstrongs in their experimental tank before the final design was selected. Strangely enough, one of the factor's in ORIANA's high speed is the bulbous bow, which is such a prominent feature of the model.

It was also found that by using aluminum for the superstructure instead of the usual steel, so much weight could be saved that it was possible to have an extra deck—thereby increasing the ship's capacity.

Another feature of ORIANA is her unusual funnel. A model was given exhaustive tests in a wind-tunnel before the final design—which ensures that smoke is carried clear of the decks whatever the wind direction—was accepted.

At noon on 3rd November 1959, ORIANA was launched at Barrow-in-Furness by H.R.H. Princess Alexandra.

"ORIANA"—her name and her badge.
According to many scholars the early seventeenth century madrigals "The Triumphs of Oriana" were inspired by the first Queen Elizabeth, and the name therefore links the present age with the earlier era of extensive voyaging and maritime excellence. The badge, with its entwined "E"'s, symbolises the link in this form of a monogram.

SOME OF THE SPECIAL FEATURES OF THE ORIANA

A system of transverse propulsion, enabling the ship to move sideways under her own power.

Mobile cranes in place of the conventional derricks.

FOUR swimming pools (one of them is for the crew).

A permanent cinema, complete with balcony.

A television system to pick up local programmes in port and a closed circuit system for use at sea.

Mechanical baggage conveyors which automatically deposit passengers' baggage at the selected deck.

DIMENSIONS OF ORIANA:
Length 804 ft.
Breadth moulded 97 ft.
Maximum draft 31 ft. 6 ins.
Gross tonnage 40,000.

COST OF ORIANA:
Approximately 39 million dollars

ACCOMMODATION:
630 First Class Passengers;
1,500 Tourist Passengers; 900 Crew.

FOR BEST RESULTS, READ THIS FIRST

1. Since this kit is molded of styrene plastic, use only **Revell ® Cement. Do not let cement touch your eyes, furniture or clothing.**
2. Apply cement sparingly. Excess cement may run and damage the details on your model.
3. Carefully trim any excess plastic from the parts before assembling. This will result in parts fitting together perfectly, and also enable moving parts to move freely.

THIS IS VERY IMPORTANT

4. All parts are numbered for easy identification, or the numbers are engraved on the bar next to the part. **Carefully remove each part from its bar only when that part is to be used.**
5. Start with No. **42** and cement it to No. **43**, etc. Carefully follow these numbered steps for ease in building your model.

With **Revell Paint Set Colors,** paint all the parts where indicated and allow to dry before assembling. All colors are **flagged** as shown: WHITE

8. Directions for applying decals are on the back of the decal sheet.

1

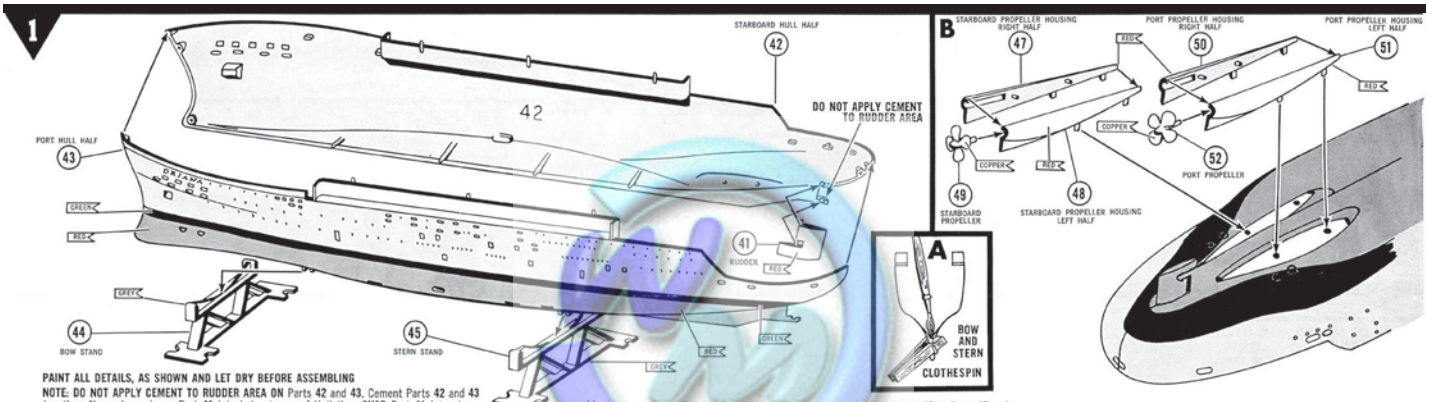

PAINT ALL DETAILS, AS SHOWN AND LET DRY BEFORE ASSEMBLING
NOTE: DO NOT APPLY CEMENT TO RUDDER AREA ON Parts **42** and **43**. Cement Parts **42** and **43** together. Now, place pin on Part **41** into hole at rear of Hull then **SNAP** Part **41** into place. Cement Parts **44** and **45** to Hull. Let dry thoroughly. Apply cement to inside of Hull, as shown in **DRAWING A.** Hold Hull together with clothespins, as shown. **SEE DRAWING B.** Turn Model upside down, as shown. Cement Part **47** and **48** together. Next, cement Part **49** to Parts **47** and **48**. Cement this assembly into place, as shown. Now, cement Parts **50** and **51** together then cement Part **52** to Parts **50** and **51**. Cement this assembly into place then set aside to dry.

2

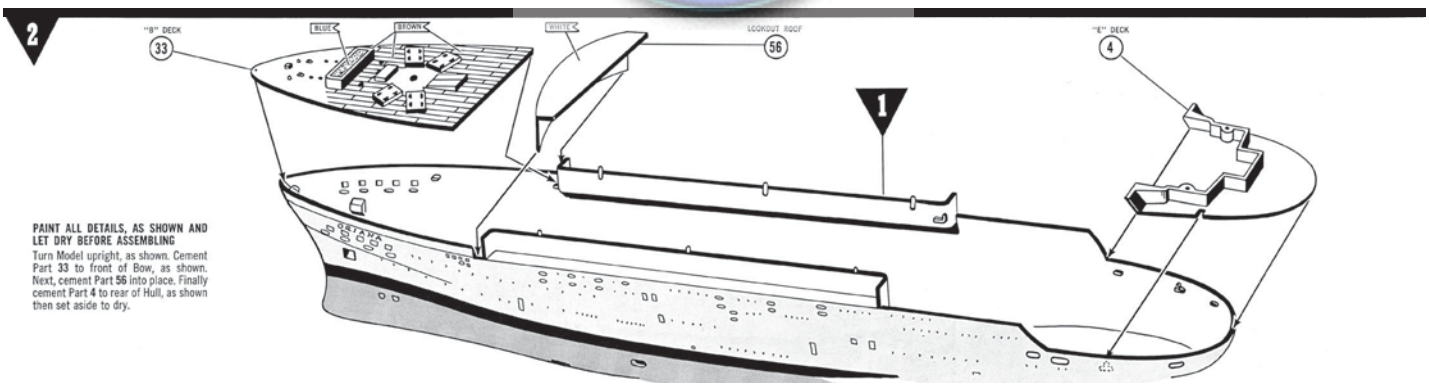

PAINT ALL DETAILS, AS SHOWN AND LET DRY BEFORE ASSEMBLING
Turn Model upright, as shown. Cement Part **33** to front of Bow, as shown. Next, cement Part **56** into place. Finally cement Part **4** to rear of Hull, as shown then set aside to dry.

3

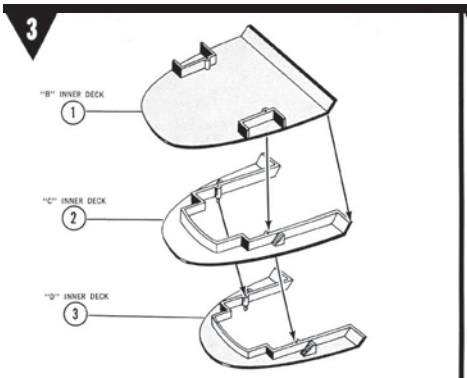

PAINT ALL DETAILS, AS SHOWN AND LET DRY BEFORE ASSEMBLING
Cement Part **2** onto Part **3**, then cement Part **1** onto Part **2**. Set aside to dry.

4

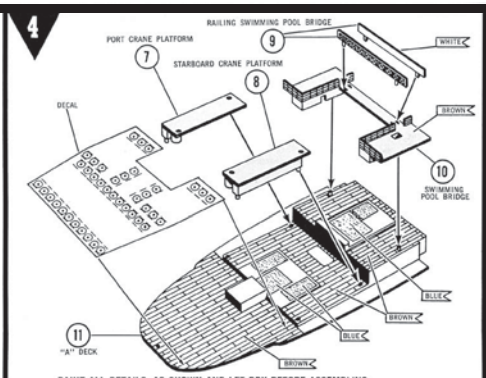

PAINT ALL DETAILS, AS SHOWN AND LET DRY BEFORE ASSEMBLING
Cement Parts **7** and **8** onto Part **11**. Now, cement Part **10** onto Part **11**, as shown. Finally, cement (2) Parts **9** onto Part **10**. Apply Decal and set aside to dry.

5

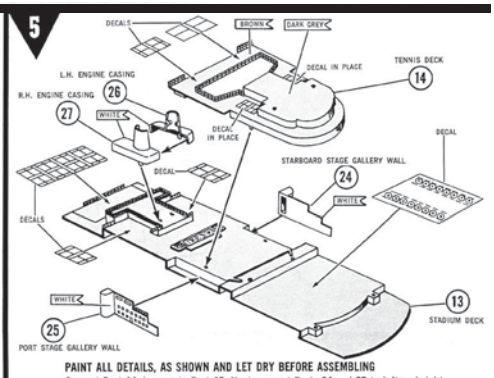

PAINT ALL DETAILS, AS SHOWN AND LET DRY BEFORE ASSEMBLING
Cement Part **14** down onto Part **13**. Next, cement Parts **24** and **25** to left and right sides of Part **13** and **14**. Now, cement Parts **26** and **27** together then down onto Part **13**, as shown. Apply Decals and set aside to dry.

6

PAINT ALL DETAILS, AS SHOWN AND LET DRY BEFORE ASSEMBLING

SEE DRAWING A. Cement Parts **16** and **17** together, then cement Part **18** onto Parts **16** and **17**. Set aside to dry. **SEE DRAWING B.** Cement Parts **19** and **20** together then set aside to dry. **SEE MAIN DRAWING.** Cement Part **23** into place on **Assembly 5**, as shown. Cement Part **15** onto **Assembly 5**, as shown. Next, cement Part **22** to Part **15** and **Assembly 5**, as shown. Now, cement **Assembly B** into place, then cement **Assembly A** onto **B** and **Assembly 5**. Finally cement Part **21** into place, as shown. Apply Decals and set aside to dry.

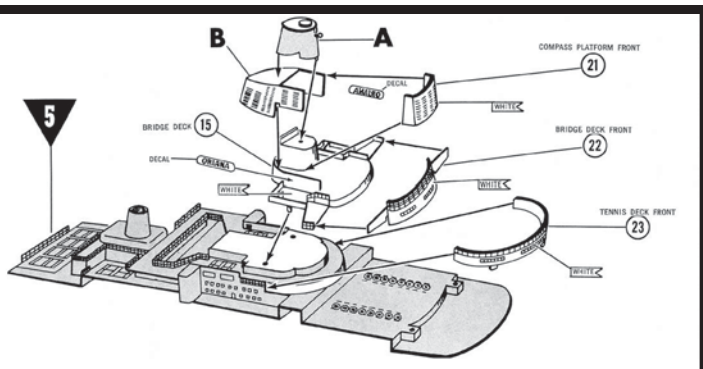

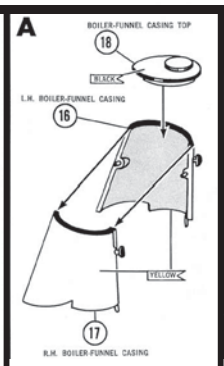

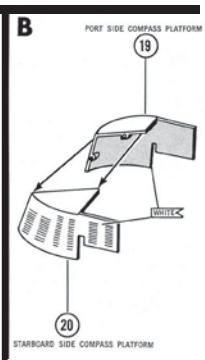

7

PAINT ALL DETAILS, AS SHOWN AND LET DRY BEFORE ASSEMBLING

Cement **Assembly 3** to rear of Hull. Slide the front of **Assembly 6** under lip on **Assembly 2**, as shown. Locate **Assembly 6** properly, then apply cement. Now cement **Assembly 4** to Hull and to **Assembly 6**, as shown. Next, cement Part **28** up under Part **29**, then cement this assembly down onto **Assembly 6**, being sure Part **29** locates to the Tennis Deck Front, as shown. **SNAP, DO NOT CEMENT** Part **32** into Deck. Cement Parts **36** and **35** into Deck, as shown. Finally cement (2) Parts **37** and (2) Parts **38** into Deck. then set aside to dry.

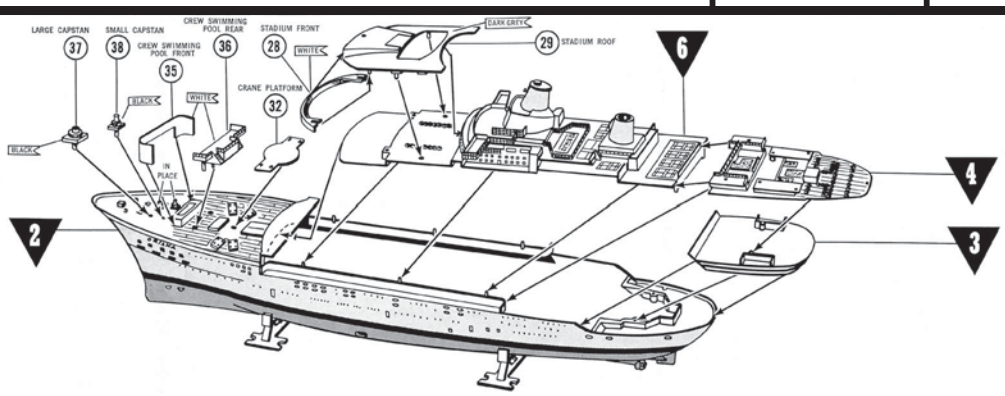

8

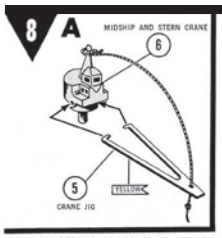

PAINT ALL DETAILS, AS SHOWN AND LET DRY BEFORE ASSEMBLING

Cement (1) Part **53** into Hull, as shown. Cement (8) Parts **34** into Front of Deck, as shown. Next, cement (2) Parts **31** into place, as shown. **SEE DRAWING A.** Cement (1) Part **5** onto (1) Part **6**. **MAKE (6) SETS.** Rig Parts **5** and **6** with Household Thread then set aside to dry. **SEE MAIN DRAWING.** Cement (1) Part **46** into place, as shown. Now, cement Part **55** to side of Hull. Hook tabs on Part **59** between Hull and Lower Deck, then push forward until Part **59** lines up properly. Apply cement to Part **59** and **55**. Finally cement (6) **Assemblies A** into place at front and rear of deck, as shown.

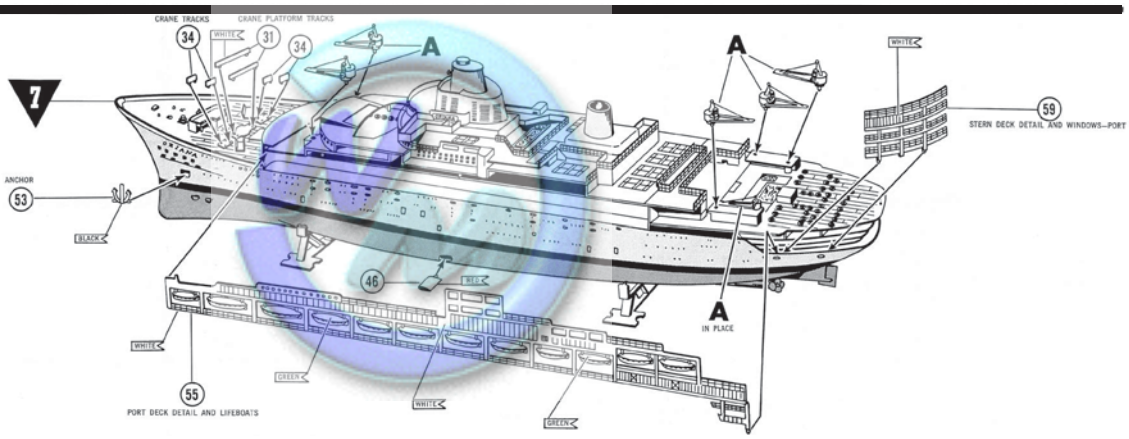

9

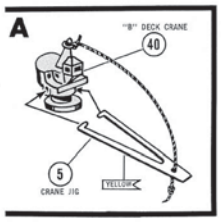

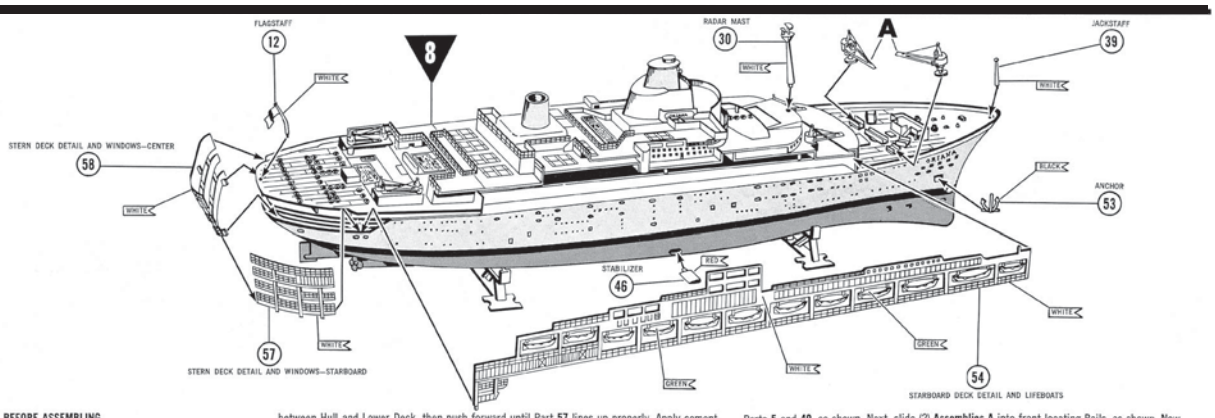

PAINT ALL DETAILS, AS SHOWN AND LET DRY BEFORE ASSEMBLING

Turn assembly around, as shown. Cement remaining Parts **46** and **53** into place, as shown. Now hook rear tab on Part **54** to side of Hull and align, then apply cement. Hook tabs on Part **57** between Hull and Lower Deck, then push forward until Part **57** lines up properly. Apply cement to Parts **57** and **54**. Next, cement Part **58** to rear of Hull and Side Railings. Cement Part **39** into hole in Bow. **SEE DRAWING A.** Cement (1) remaining Part **5** onto (1) Part **40**. **MAKE (2) SETS.** Rig Parts **5** and **40**, as shown. Next, slide (2) **Assemblies A** into front locating Rails, as shown. Now, cement Parts **30** and **12** into place. **SEE DRAWING BELOW FOR RIGGING, FLAG AND DECAL PLACEMENT.**

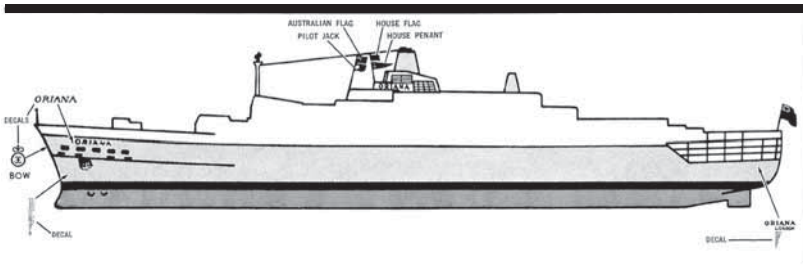

Distances in Miles

These are the routes ORIANA will follow in her voyaging about the world.

1313	London – Gibraltar	5120	Colombo – Fremantle	456	Naples – Marseilles	2008	Trinidad – Madeira	2790	Suva – Honolulu								
976	Gibraltar – Naples	1319	Fremantle – Adelaide	696	Marseilles – Gibraltar	1326	Madeira – Le Havre	2442	Honolulu – Vancouver								
491	Naples – Navarino Bay	505	Adelaide – Melbourne	1767	Gibraltar – Southampton	881	Le Havre – Lisbon	878	Vancouver – San Francisco							348	Yokohama – Kobe
636	Navarino Bay – Port Said	578	Melbourne – Sydney	375	San Francisco – Los Angeles	3171	Lisbon – Trinidad	2528	Los Angeles – Honolulu							1377	Kobe – Hong Kong
1112	Naples – Port Said	638	Sydney – Hobart	2923	Los Angeles – Panama	183	Le Havre – London	2389	Honolulu – Yokohama							3915	Manila – Sydney
1508	Port Said – Aden	470	Hobart – Melbourne	44	Panama Canal	1174	Sydney – Auckland	1584	Yokohama – Hong Kong								
2530	Aden – Colombo	3015	London – Port Said	1138	Colon – Trinidad	1130	Auckland – Suva	830	Hong Kong – Manila								